HYSV10–25 (2/2 Solenoid Valve,Non–return Type)

Description

A solenoid operated, 2–way, 2–position,
normally open, spool–type cartridge valve.

Operation

When de–energized, the valve allows flow in both directions. When energized, the cartridge's spool shifts to block flow in both directions.

Specifications

Max. operating pressure:	207 Bar
Flow:	Inlet at port ② :up to 22.7lpm; Inlet at port ① :18.9lpm;
Internal leakage:	82 cc/min.max.at 207 bar
Temperature:	(–40℃ To +120℃) with NBR material seals
Coil duty rating:	Continuous from 85% to 115% of nominal voltage
Fluids:	Mineral–based fluids with viscosities of 7.4 to 420 cSt.
Cavity:	HY10–2,see page H.1.3
Body material:	6061–T6 Aluminum alloy rated to 207 bar, steel & ductile iron rated to 350 bar

Code symbol 、profile and pressure drop vs.flow

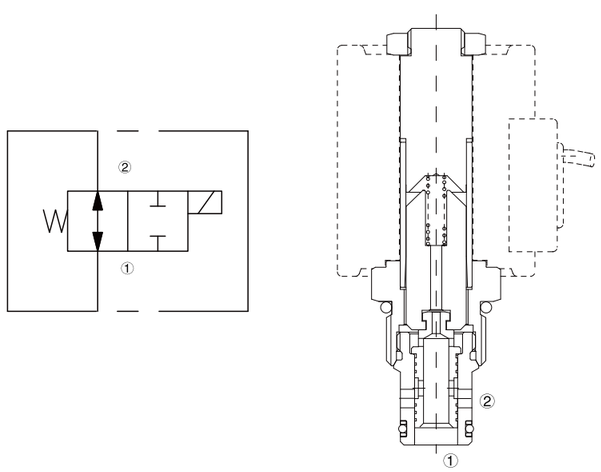

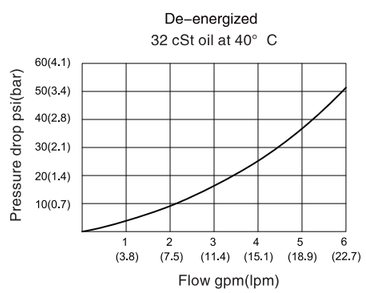

HYSV10–25 (2/2 Solenoid Valve,Non–return Type)

External dimensions

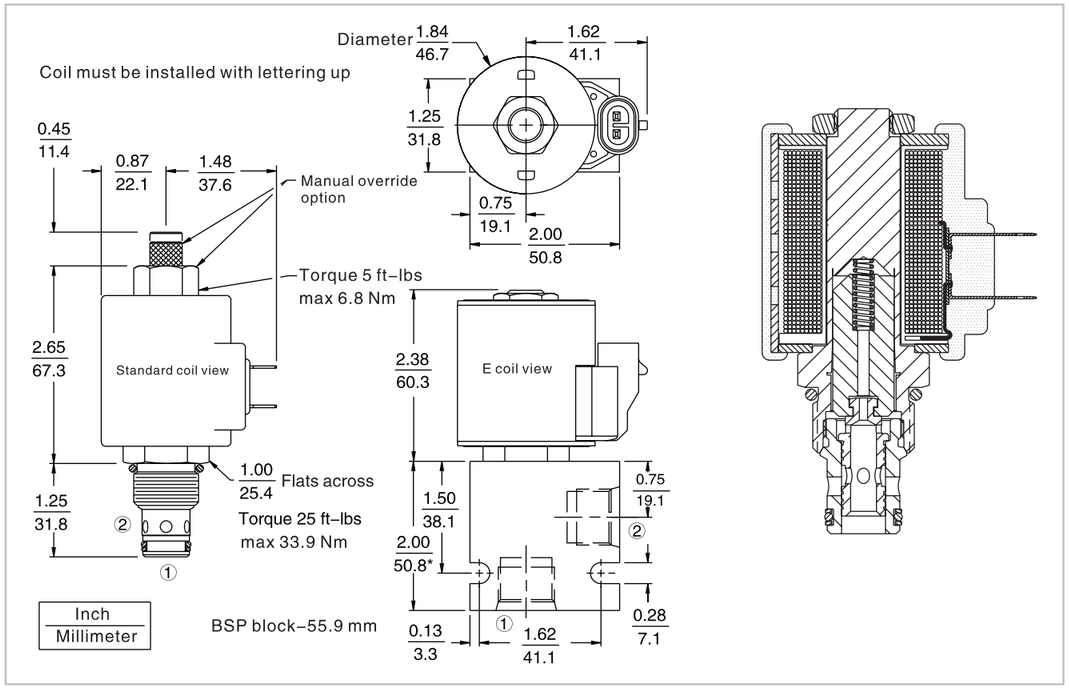

Material science and order model

Cartridge: weight：0.16 kg (0.35 lb);
Steel,the working face is duratected
Surcace zine–plated;
NBR material sealing and
check ring (standard).

Block:weight :0.16 kg (0.35 lb);
High–strength performance aluminum
alloy with anodic oxidation;
#6061 T6;
Rated pressure up to 240 bar (3500 psi);
See 8.010.1. Also available with ductile
cast iron and steel material;
Size might be different,please consult factory.

Standard coil:weight:0.27kg (0.60 lb);
Heat–wrappinf pack,Class H
heat–resistant enamelled wire;
See 3.200.1.

E type coil:weight :0.41 kg (0.9 lb);
Soid metallic shell encapsulated;
IP 69K rated,integrated connector.

Note:regarding all new application for
E type coil,please refer to 3.400.1.

HYSV10–25 – – –

Option

None	(Blank)
Manual override	M
Manual override	Y
Manual override	J

Information about manual override,please refer to 3.001.1

Porting

Cartridge only	0
SAE 6	6T
SAE 8	8T
1/4 Inch BSP*	2B
3/8 Inch BSP*	3B
1/2 Inch BSP*	4B

*BSP block only for UK made

Seals

Buna (Std.)	N
Fluorocarbon	V

Voltage std.coil

0	Less coil**
10	10 VDC †
12	12 VDC
24	24 VDC
36	36 VDC
48	48 VDC
24	24 VAC
115	115 VAC
230	230 VAC

** Includes std.coil nut
† DS,DW or DL teminations only

E type coil

10	10 VDC
12	12 VDC
20	20 VDC
24	24 VDC

Termination std.coil (VDC)

DS	Dual spades
DG	DIN 43650
DL	Leadwire (2)
DL/W	Leadwire,lead w/weatherpak®connectors
DR	Deutsch DT04–2P

Termination std.coli (VAC)

AG	DIN 43650
AP	1/2 inch conduit

E type coil termination (VDC)

ER	Deutsch DT04–2P (IP69K rated)
EY	Metri–Pack® 150 (IP69K rated)

Coils with internal diode are available,please consult factory.