HYRV08–20 (Cartridge Direct Acting Relief Valve)

Description

A cartridge–style direct–acting poppet–type relief valve.

Operation

The valve blocks flow from ① to ② until sufficient pressure is present at ① to force the poppet from its seat.

Specifications

Operating pressure:	248 Bar
Standard spring ranges:	3.45 To 34.48 bar; preset : 17 bar
	6.9 To 75.86 bar; preset : 38 bar
	17.24 To 158.62 bar; preset : 80 bar
	17.24 To 248.28 bar; preset : 124 bar
Reseat pressure:	80% Of crack pressure (crack pressure at 0.95 lpm /0.25 gpm)
Flow:	See pressure drop vs.flow graph
Internal leakage:	5 Drops/min. max. to 75% of nominal setting
Temperature:	(–40℃ To +120℃) with NBR material seals
Fluids:	Mineral–based fluids with viscosities of 7.4 to 420 cSt.
Cavity:	HY08–2,see page H.1.2
Body material:	6061–T6 Aluminum alloy rated to 207 bar, steel & ductile iron rated to 350 bar

Code symbol 、profile and pressure drop vs.flow

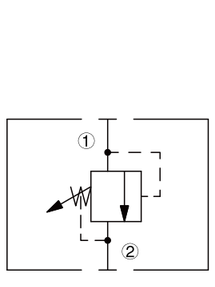

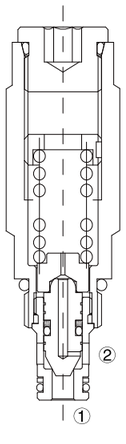

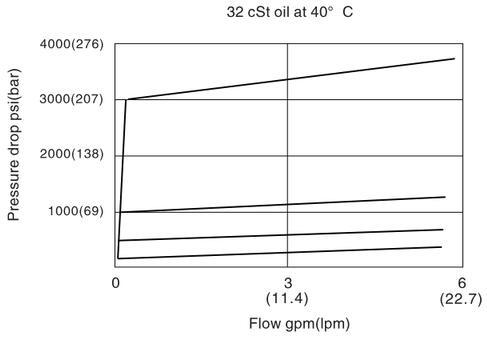

HYRV08–20 (Cartridge Direct Acting Relief Valve)

External dimensions

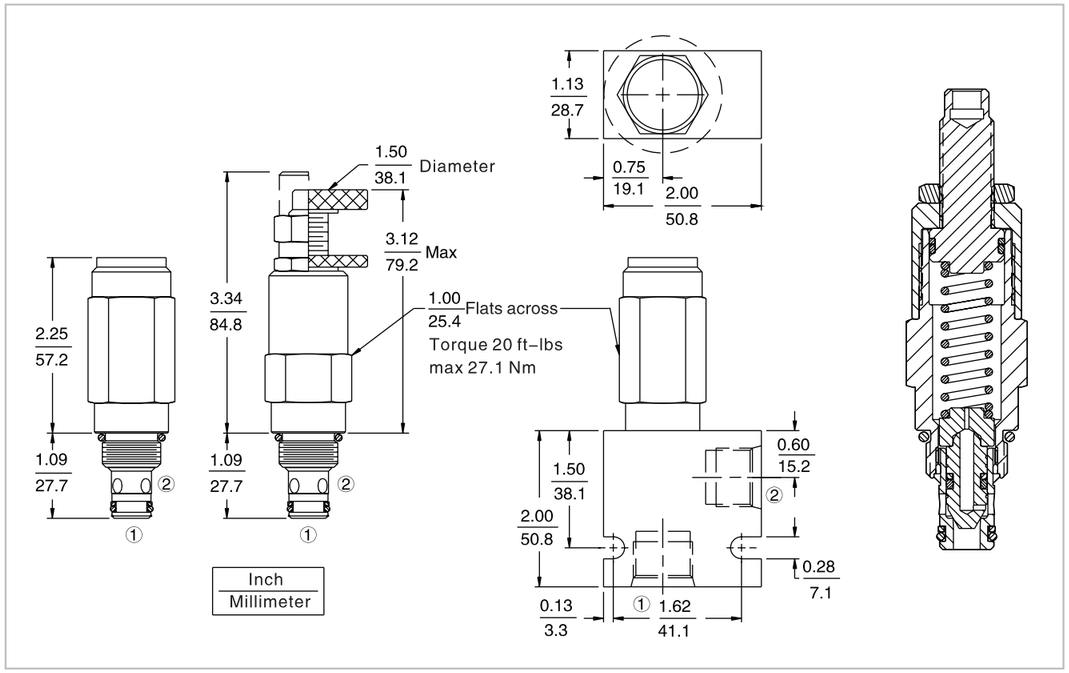

Material science and order model

Cartridge: weight: 0.23 kg (0.50 lb);
Steel,the working face is duratected
Surcace zine–plated;
NBR material sealing and
check ring (standard).

Block:weight :0.16 kg (0.35 lb);
High–strength performance
aluminum alloy with anodic
oxidation;#6061 T6;
Rated pressure up to 240 bar (3500 psi);
Also available with ductile cast iron and
steel material;
Size might be different,please consult factory.

HYRV08–20 – – – – /

Adjustment option

1/4 In.hex allen head	A
1–1/2 In.dia.alum.knob	B
Option A w/cover cap	C
Factory preset non– adjustment	F
Factory preset hidden adjustment	H
Option C w/lockwire holes	L

Porting

Cartridge only	0
SAE 4	4T
SAE 6	6T
SAE 8	8T
1/4 Inch BSP*	2B
3/8 Inch BSP*	3B
1/2 Inch BSP*	4B

Seals

Pressure on P only

Buna N (std.)	N
Fluorocarbon	V

Bidirectional pressure

Buna N (std.)	NC
Fluorocarbon	VC

Setting in bar†

(Blank)	For adjustable,or specify,for example:
M25	25 Bar
M100	100 Bar

Setting in psi

(Blank)	For adjustable,or specify,for example:
9.0	900 Psi
23.5	2350 Psi

Spring range

5	3.45 ~ 34.48 Bar (50 ~ 500 Psi)
9	6.90 ~ 75.86 Bar (100 ~ 1100 Psi)
18	17.24 ~ 158.62 Bar (250 ~ 2300 Psi)
33	17.24 ~ 248.28 Bar (250 ~ 3600 Psi)

† Adjustabel valves will be preset to approx.50% of spring max.potential.